FACULTAD DE INGENIERIA
Universidad de Buenos Aires

CONTROL AUTOMÁTICO I - 86.08

Trabajo Práctico I: Modelos

Alejandro S. Ghersin

GENERALIDADES

- Los trabajos prácticos son de carácter INDIVIDUAL. Está prohibido compartir código, realizar las resoluciones en grupo. Se considerará como de buena ética académica intercambiar opiniones y/o referencias bibliográficas que sean de interés para resolver los prácticos. NO MÁS QUE ESO.
- Cada entrega debe tener:
  1. Un archivo .PDF con el informe de la resolución del TP, bien redactado y referenciado y sin faltas de ortografía.
  2. Los archivos con el código MATLAB, OCTAVE o SCILAB, deben presentarse debidamente comentados. Los mismos deben correr fluidamente en el sentido de mostrar en pantalla los comentarios necesarios para entender la resolución FÁCILMENTE para el docente que corrige.
  3. Los archivos SIMULINK o XCOS con todos simuladores pedidos en el TP.
  4. **Todo el código y los diagramas de simulación** Simulink o Xcos deben estar embebidos en el informe PDF presentado de una manera legible corregible, ya sea como apéndice, o intercalado en la resolución de los problemas.
- Se habilitará la carga de la resolución del TP vía campus.
- Además, cada cual debe enviar la resolución a su docente asignado cc al profesor responsable de la materia por e-mail, desde su casilla FIUBA a la casilla FIUBA de los docentes.

PROBLEMA 1. MASA–RESORTE–FRICCIÓN

1.1. Problema de UN grado de libertad

A mano:

a) Obtener una descripción en espacio de estados.
b) Obtener la transferencia, aplicando Laplace a la ecuación diferencial de la dinámcia por un lado y a partir de la descripción en espacio de estados por el otro, es decir pasando de las matrices A,B,C,D a la transferencia. Verificar que den igual.
c) Obtener analíticamente la respuesta al escalón de "u" a "y", a través de la transformada de Laplace.

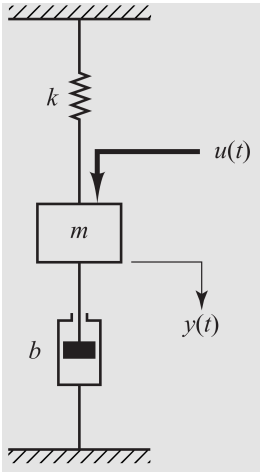

Figura 1.1: Sistema Masa–Resorte c/ fricción.

d) Obtener la respuesta a condiciones iniciales en posición y velocidad por medio de la exponencial matricial (esta última se puede calcular a través de la transformada de Laplace, u otro método).

MATLAB:

a) Verificar todos los resultados, mediante los comandos ss, tf/zpk. Verificar la exponencial matricial mediante el symbolic toolbox y la función ilaplace.
b) Obtener las respuetas al impulso y escalón mediante Simulink y también usando el toolbox de control de matlab, demostrando el uso de los comandos “step”, “initial” e “impulse”.

Constantes del Problema:

Símbolo	Magnitud	Valor
m	Masa 1	$1\ Kg$
b	Fricción	$1\ \frac{N}{m/s}$
m	Resorte	$1\ \frac{N}{m}$

1.2. Dos Grados de Libertad.

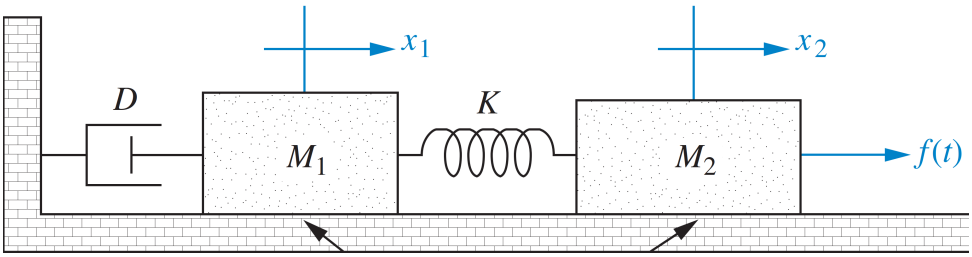

Figura 1.2: Sistema mecánico con dos masas.

Repetir el problema anterior para el sistema mecánico de la Fig. 1.2.

Constantes del Problema:

Símbolo	Magnitud	Valor
M_1	Masa 1	$1\ Kg$
M_2	Masa 2	$2\ Kg$
D	Fricción	$0{,}5\ \frac{N}{m/s}$
K	Resorte	$1\ \frac{N}{m}$

PROBLEMA 2. RED RLC DE TERCER ORDEN

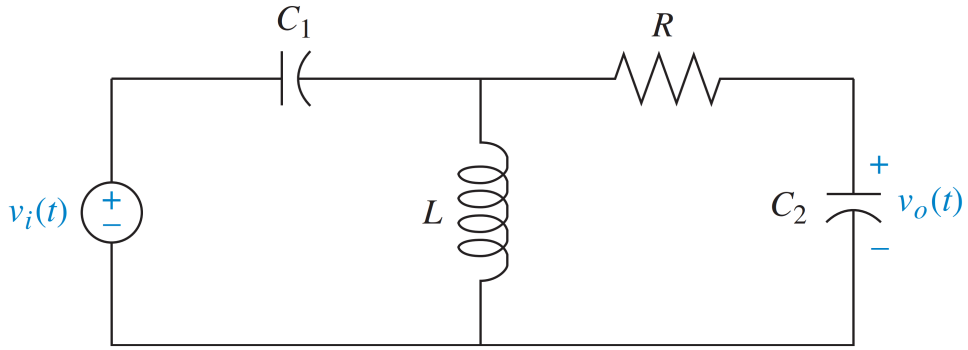

Figura 2.1: Sistema eléctrico.

Repetir el problema anterior para el sistema eléctrico de la Fig. 2.1.
Constantes del Circuito:

Símbolo	Magnitud	Valor
C_1	Capacitor 1	10 μF
C_2	Capacitor 2	20 μF
R	Resistor	10 $K\Omega$
L	Inductor	2,75 mH

PROBLEMA 3. MOTOR DE CONTINUA

Obtener un modelo en espacio de estados del siguiente sistema de control de posición angular (ángulo θ).

A mano

a) Obtener una descripción en espacio de estados.
b) Obtener la transferencia, aplicando Laplace y a partir de la descripción en espacio de estados.
c) Obtener analíticamente la respuesta al escalón de "F" a "x", a través de la transformada de Laplace,
d) Obtener la respuesta a condiciones iniciales en posición y velocidad por medio de la exponencial matricial (esta última se puede calcular a través de la transformada de Laplace, u otro método). VER EL Skill Assesment Exercise 4.10 NISE 2015.

MATLAB:

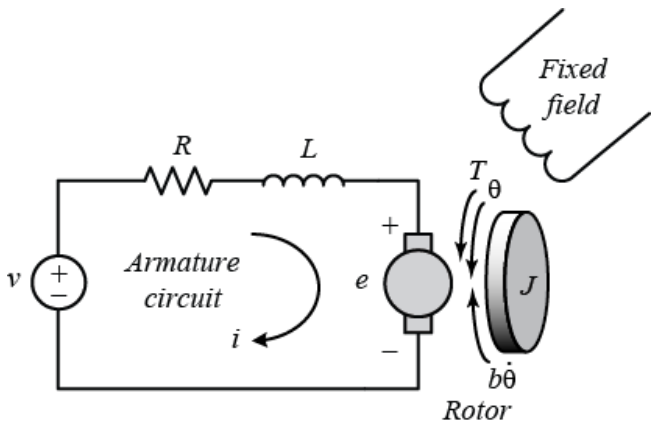

Figura 3.1: Esquema del Motor de C.C..

a) Verificar todos los resultados, mediante los comandos ss, tf/zpk. Verificar la exponencial matricial mediante el symbolic toolbox y la función ilaplace.
b) Obtener las respuetas al impulso y escalón mediante Simulink y también usando el toolbox de control de matlab, demostrando el uso de los comandos “step”, “initial” e “impulse”.

PROBLEMA 4. TANQUES DE AGUA ACOPLADOS

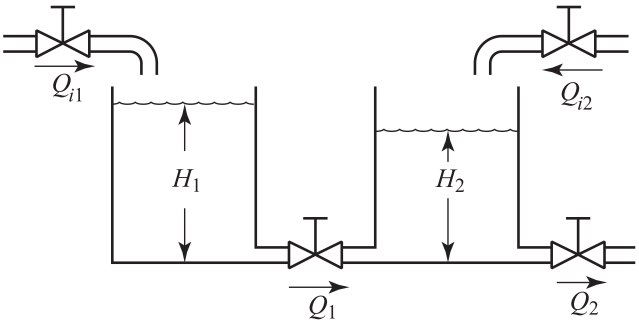

Figura 4.1: Tanques Acoplados.

Obtener un modelo en espacio de estados del siguiente sistema de control de nivel de los tanques representado esquemáticamente en la Fig. 4.1.
Tips de modelado:

- Ecuaciones no lineales de la dinámica:

$$Q_1 = \alpha_1 \sqrt{H_1 - H_2} \qquad\qquad Q_2 = \alpha_2 \sqrt{H_2}$$

- La variación en el volumen de líquido en cada tanque, es igual al caudal de entrada menos el caudal de salida. Para más información, buscar el desarrollo del libro de Dorf y Bishop.
- Además, por la geometría de los tanques, el volumen de líquido es proporcional al nivel, es decir:

$$V_1 = \gamma_1 H_1 \qquad\qquad V_2 = \gamma_2 H_2$$

- **Linealización en espacio de estados:** Verificar que den lo mismo con el toolbox de Symbolic de MATLAB.
- Asuma que todas las constantes son unitarias (α_1, α_2, γ_1, γ_2, iguales a uno).
- Calcular los valores de equilibrio para H_1, H_2 y Q_{i1}, tales que el caudal de salida es de 1 $\frac{m^3}{seg.}$ suponiendo que $Q_{i2} = 0$.
- Conectarle al sistema en Simulink un control proporcional/integral que realimenta el nivel del segundo tanque y tiene como señal de referencia un caudal un 10% mayor que el caudal de salida de equilibrio del segundo tanque. Simular los resultados.
- Agregar a la simulación un escalón de perturbación a la señal Q_{i2} que sea de un valor del 20% del valor de Q_{i1} en el equilibrio.

Símbolo	Magnitud	Valor
(J)	Momento de Inercia del Rotor	$3{,}2284E-6\ kg.m^2$
(b)	Fricción Viscosa	$3{,}5077E-6\ N.m.s$
(Kb)	Constante de la FCEM	$0{,}0274\ V/rad/sec$
(Kt)	Constante de Torque	$0{,}0274\ N.m/Amp$
(R)	Resistencia del devanado	$4\ \Omega$
(L)	Inductancia del devanado	$2{,}75E-6\ H$

Cuadro 3.1: Valores del Problema del Motor.

Nota sobre notación:

- Variables de estado: Usted verá que en todos los problemas de control de nivel de tanques que aparecen en los libros, las variables de estado son los NIVELES.
- $x_1 = H_1$, $x_2 = H_2$, $u = Q_{i1}$, $y = Q_2$.
- $\bar{x}_1 = \bar{H}_1$, $\bar{x}_2 = \bar{H}_2$, $\bar{u} = \bar{Q}_{i1}$, $\bar{y} = \bar{Q}_2$ serán los valores de equilibrio.
- La notación para las variables de "*pequeña señal*" - desvíos respecto del equilibrio - será:

$$\xi_1 = x_1 - \bar{x}_1, \qquad \nu = u - \bar{u}, \tag{4.1}$$

$$\xi_2 = x_2 - \bar{x}_2, \qquad \zeta = y - \bar{y}. \tag{4.2}$$

  Estas ξ_1 y ξ_2 como las variables de estado de la linealización.

REFERENCIAS

Åström, Karl J. y Richard M. Murray (2020). *Feedback Systems: An Introduction for Scientists and Engineers.* 2.ª ed. URL: `http://www.cds.caltech.edu/~murray/amwiki/index.php/Second_Edition`.

Dorf, Richard C. y Robert H. Bishop (2017). *Modern Control Systems.* 13th Edition. Pearson. ISBN: 9780134407623.

Franklin, Gene F., David J. Powell y Abbas Emami–Naeini (2019). *Feedback Control of Dynamic Systems.* 8.ª ed. Pearson. ISBN: 9780134685717.

Nise, Norman S. (2015). *Control Systems Engineering.* 7.ª ed. Wiley. ISBN: 9781118800829.

SOBRE EL PROBLEMA DE LOS TANQUES

Aclaraciones en relación a dificultades usuales que suelen haber para plantear el modelo de los tanques.
Las ecuaciones que relacionan los niveles de los tanques con los caudales Q_1 y Q_2 son las siguientes:

$$Q_1 = \alpha_1 \sqrt{H_1 - H_2} \qquad\qquad Q_2 = \alpha_2 \sqrt{H_2}$$

Por otra parte la geometría del problema nos dicta que los volúmenes se relacionan con las alturas de la siguiente forma:

$$V_1 = \gamma_1 H_1 \qquad\qquad V_2 = \gamma_2 H_2$$

Y el punto donde algunos no logran atar cabos los alumnos es en plantear la ecuación de balance de masas, para la cual deberían mirar el ejemplo del libro de Dorf y Bishop que se agrega junto con esta guía.
En nuestro caso, para facilitar las cosas, más que balance de masas planteamos balance de volúmenes teniendo en cuenta que los caudales los medimos suponiendo que se trata de agua, en $\frac{m^3}{s}$. Se trata entonces de flujos volumétricos. De esta forma podemos decir directamente que por definición, la derivada del volumen de los tanques directamente es igual a el/los caudal/es que entra/n menos el caudal que sale de cada uno de los tanques.

$$\frac{dV_1}{dt} = \gamma_1 \frac{dH_1}{dt} \qquad\qquad \frac{dV_2}{dt} = \gamma_2 \frac{dH_2}{dt}$$

$$\frac{dV_1}{dt} = \gamma_1 \frac{dH_1}{dt} = Q_{i1} - Q_1 \qquad\qquad \frac{dV_2}{dt} = \gamma_2 \frac{dH_2}{dt} j = Q_1 + Q_{i2} - Q_2$$

the closed-loop transfer function is

$$T(s) = \frac{K(K_P s + K_I)}{s^3 + ps^2 + KK_P s + KK_I}. \tag{2.101}$$

We can select the controller gains in Equation (2.101) to place the poles of $T(s)$ in the desired locations to meet the desired performance specifications. ■

EXAMPLE 2.12 **Fluid flow modeling**

A fluid flow system is shown in Figure 2.37. The reservoir (or tank) contains water that evacuates through an output port. Water is fed to the reservoir through a pipe controlled by an input valve. The variables of interest are the fluid velocity V (m/s), fluid height in the reservoir H (m), and p ressure p (N/m^2). The pressure is defined as the force per unit area exerted by the fluid on a surface immersed (and at rest with respect to) the fluid. Fluid pressure acts normal to the surface. For further reading on fluid flow modeling, see [28–30].

The elements of the control system design process emphasized in this example are shown in Figure 2.38. The strategy is to establish the system configuration and then obtain the appropriate mathematical models describing the fluid flow reservoir from an input–output perspective.

The general equations of motion and energy describing fluid flow are quite complicated. The governing equations are coupled nonlinear partial differential equations. We must make some selective assumptions that reduce the complexity of the mathematical model. Although the control engineer is not required to be a fluid dynamicist, and a deep understanding of fluid dynamics is not necessarily acquired during the control system design process, it makes good engineering sense to gain at least a rudimentary understanding of the important simplifying assumptions. For a more complete discussion of fluid motion, see [31–33].

To obtain a realistic, yet tractable, mathematical model for the fluid flow reservoir, we first make several key assumptions. We assume that the water in the tank is incompressible and that the flow is inviscid, irrotational and steady. An incompressible fluid has a constant density ρ (kg/m^3). In fact, all fluids are compressible to some extent. The compressibility factor, k, is a measure of the compressibility of

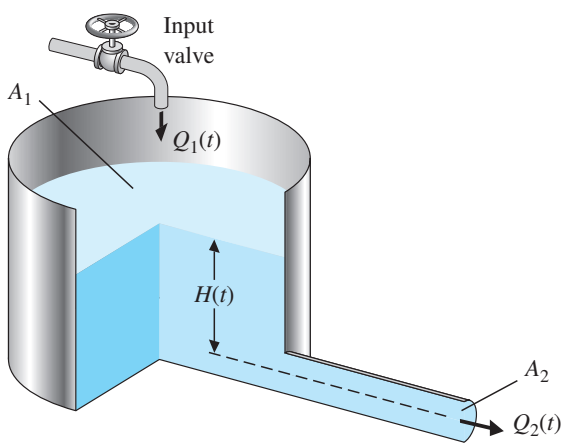

FIGURE 2.37
The fluid flow reservoir configuration.

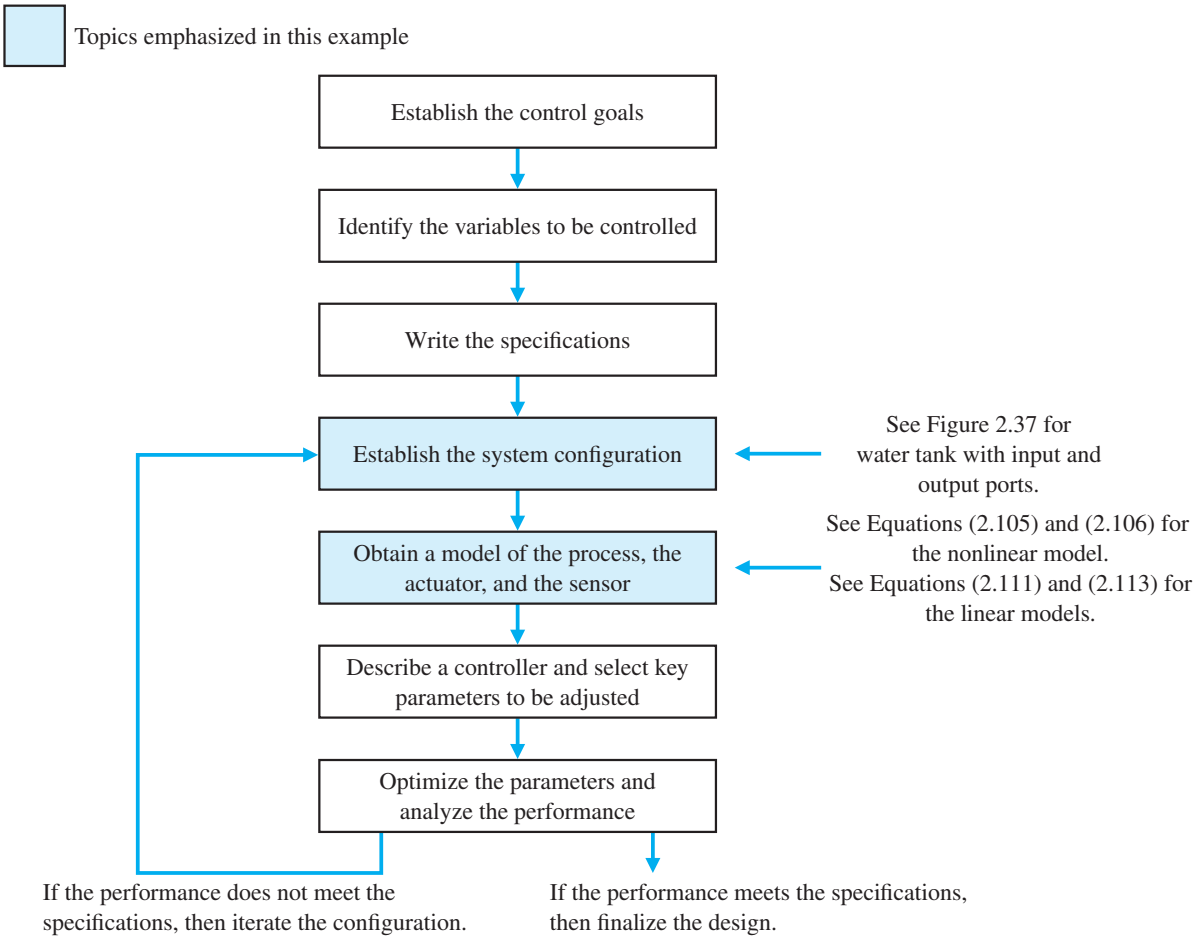

FIGURE 2.38 Elements of the control system design process emphasized in the fluid flow reservoir example.

a fluid. A smaller value of k indicates less compressibility. Air (which is a compressible fluid) has a compressibility factor of $k_{air} = 0.98\ m^2/N$, while water has a compressibility factor of $k_{H_2O} = 4.9 \times 10^{-10}\ m^2/N = 50 \times 10^{-6}\ atm^{-1}$. In other words, a given volume of water decreases by 50 one-millionths of the original volume for each atmosphere (atm) increase in pressure. Thus the assumption that the water is incompressible is valid for our application.

Consider a fluid in motion. Suppose that initially the flow velocities are different for adjacent layers of fluid. Then an exchange of molecules between the two layers tends to equalize the velocities in the layers. This is internal friction, and the exchange of momentum is known as viscosity. Solids are more viscous than fluids, and fluids are more viscous than gases. A measure of viscosity is the coefficient of viscosity μ ($N\ s/m^2$). A larger coefficient of viscosity implies higher viscosity. The coefficient of viscosity (under standard conditions, 20°C) for air is $\mu_{air} = 0.178 \times 10^{-4}\ N\ s/m^2$, and for water we have $\mu_{H_2O} = 1.054 \times 10^{-3}\ N\ s/m^2$.

Therefore water is about 60 times more viscous than air. Viscosity depends primarily on temperature, not pressure. For comparison, water at 0°C is about 2 times

more viscous than water at 20°C. With fluids of low viscosity, such as air and water, the effects of friction are important only in the boundary layer, a thin layer adjacent to the wall of the reservoir and output pipe. We can neglect viscosity in our model development. We say our fluid is inviscid.

If each fluid element at each point in the flow has no net angular velocity about that point, the flow is termed irrotational. Imagine a small paddle wheel immersed in the fluid (say in the output port). If the paddle wheel translates without rotating, the flow is irrotational. We will assume the water in the tank is irrotational. For an inviscid fluid, an initially irrotational flow remains irrotational.

The water flow in the tank and output port can be either steady or unsteady. The flow is steady if the velocity at each point is constant in time. This does not necessarily imply that the velocity is the same at every point but rather that at any given point the velocity does not change with time. Steady-state conditions can be achieved at low fluid speeds. We will assume steady flow conditions. If the output port area is too large, then the flow through the reservoir may not be slow enough to establish the steady-state condition that we are assuming exists and our model will not accurately predict the fluid flow motion.

To obtain a mathematical model of the flow within the reservoir, we employ basic principles of science and engineering, such as the principle of conservation of mass. The mass of water in the tank at any given time is

$$m(t) = \rho A_1 H(t), \tag{2.102}$$

where A_1 is the area of the tank, ρ is the water density, and $H(t)$ is the height of the water in the reservoir. The constants for the reservoir system are given in Table 2.6.

In the following formulas, a subscript 1 denotes quantities at the input, and a subscript 2 refers to quantities at the output. Taking the time derivative of $m(t)$ in Equation (2.102) yields

$$\dot{m}(t) = \rho A_1 \dot{H}(t),$$

where we have used the fact that our fluid is incompressible (that is, $\dot{\rho} = 0$) and that the area of the tank, A_1, does not change with time. The change in mass in the reservoir is equal to the mass that enters the tank minus the mass that leaves the tank, or

$$\dot{m}(t) = \rho A_1 \dot{H}(t) = Q_1(t) - \rho A_2 v_2(t), \tag{2.103}$$

where $Q_1(t)$ is the input mass flow rate, $v_2(t)$ is the exit velocity, and A_2 is the output port area. The exit velocity, $v_2(t)$, is a function of the water height. From Bernoulli's equation [39] we have

$$\frac{1}{2}\rho v_1^2(t) + P_1 + \rho g H(t) = \frac{1}{2}\rho v_2^2(t) + P_2,$$

Table 2.6 Water Tank Physical Constants

ρ (kg/m^3)	g (m/s^2)	A_1 (m^2)	A_2 (m^2)	H^* (m)	Q^* (kg/s)
1000	9.8	$\pi/4$	$\pi/400$	1	34.77

where v_1 is the water velocity at the mouth of the reservoir, and P_1 and P_2 are the atmospheric pressures at the input and output, respectively. But P_1 and P_2 are equal, and A_2 is sufficiently small ($A_2 = A_1/100$), so the water flows out slowly and the velocity $v_1(t)$ is negligible. Thus Bernoulli's equation reduces to

$$v_2(t) = \sqrt{2gH(t)}. \tag{2.104}$$

Substituting Equation (2.104) into Equation (2.103) and solving for $\dot{H}(t)$ yields

$$\dot{H}(t) = -\left[\frac{A_2}{A_1}\sqrt{2g}\right]\sqrt{H(t)} + \frac{1}{\rho A_1}Q_1(t). \tag{2.105}$$

Using Equation (2.104), we obtain the exit mass flow rate

$$Q_2(t) = \rho A_2 v_2(t) = (\rho\sqrt{2g}A_2)\sqrt{H(t)}. \tag{2.106}$$

To keep the equations manageable, define

$$k_1 := -\frac{A_2\sqrt{2g}}{A_1}, \qquad k_2 := \frac{1}{\rho A_1}, \qquad \text{and} \qquad k_3 := \rho\sqrt{2g}A_2.$$

Then, it follows that

$$\begin{aligned} \dot{H}(t) &= k_1\sqrt{H(t)} + k_2 Q_1(t), \\ Q_2(t) &= k_3\sqrt{H(t)}. \end{aligned} \tag{2.107}$$

Equation (2.107) represents our model of the water tank system, where the input is $Q_1(t)$ and the output is $Q_2(t)$. Equation (2.107) is a nonlinear, first-order, ordinary differential equation model. The model in Equation (2.107) has the functional form

$$\begin{aligned} \dot{H}(t) &= f(H(t), Q_1(t)), \\ Q_2(t) &= h(H(t), Q_1(t)), \end{aligned}$$

where

$$f(H(t), Q_1(t)) = k_1\sqrt{H(t)} + k_2 Q_1(t) \quad \text{and} \quad h(H(t), Q_1(t)) = k_3\sqrt{H(t)}.$$

A set of linearized equations describing the height of the water in the reservoir is obtained using Taylor series expansions about an equilibrium flow condition. When the tank system is in equilibrium, we have $\dot{H}(t) = 0$. We can define Q^* and H^* as the equilibrium input mass flow rate and water level, respectively. The relationship between Q^* and H^* is given by

$$Q^* = -\frac{k_1}{k_2}\sqrt{H^*} = \rho\sqrt{2g}A_2\sqrt{H^*}. \tag{2.108}$$

This condition occurs when just enough water enters the tank in A_1 to make up for the amount leaving through A_2. We can write the water level and input mass flow rate as

$$\begin{aligned} H(t) &= H^* + \Delta H(t), \\ Q_1(t) &= Q^* + \Delta Q_1(t), \end{aligned} \tag{2.109}$$

where $\Delta H(t)$ and $\Delta Q_1(t)$ are small deviations from the equilibrium (steady-state) values. The Taylor series expansion about the equilibrium conditions is given by

$$\dot{H}(t) = f(H(t), Q_1(t)) = f(H^*, Q^*) + \left.\frac{\partial f}{\partial H}\right|_{\substack{H=H^* \\ Q1=Q^*}} (H(t) - H^*) \tag{2.110}$$
$$+ \left.\frac{\partial f}{\partial Q_1}\right|_{\substack{H=H^* \\ Q1=Q^*}} (Q_1(t) - Q^*) + \cdots,$$

where

$$\left.\frac{\partial f}{\partial H}\right|_{\substack{H=H^* \\ Q1=Q^*}} = \left.\frac{\partial(k_1\sqrt{H} + k_2 Q_1)}{\partial H}\right|_{\substack{H=H^* \\ Q1=Q^*}} = \frac{1}{2}\frac{k_1}{\sqrt{H^*}},$$

and

$$\left.\frac{\partial f}{\partial Q_1}\right|_{\substack{H=H^* \\ Q1=Q^*}} = \left.\frac{\partial(k_1\sqrt{H} + k_2 Q_1)}{\partial Q_1}\right|_{\substack{H=H^* \\ Q1=Q^*}} = k_2.$$

Using Equation (2.108), we have

$$\sqrt{H^*} = \frac{Q^*}{\rho\sqrt{2g}A_2},$$

so that

$$\left.\frac{\partial f}{\partial H}\right|_{\substack{H=H^* \\ Q_1=Q^*}} = -\frac{{A_2}^2}{A_1}\frac{g\rho}{Q^*}.$$

It follows from Equation (2.109) that

$$\dot{H}(t) = \Delta\dot{H}(t),$$

since H^* is constant. Also, the term $f(H^*, Q^*)$ is identically zero, by definition of the equilibrium condition. Neglecting the higher order terms in the Taylor series expansion yields

$$\Delta\dot{H}(t) = -\frac{{A_2}^2}{A_1}\frac{g\rho}{Q^*}\Delta H(t) + \frac{1}{\rho A_1}\Delta Q_1(t). \tag{2.111}$$

Equation (2.111) is a linear model describing the deviation in water level $\Delta H(t)$ from the steady state due to a deviation from the nominal input mass flow rate $\Delta Q_1(t)$.

Similarly, for the output variable $Q_2(t)$ we have

$$Q_2(t) = Q_2^* + \Delta Q_2(t) = h(H(t), Q_1(t)) \tag{2.112}$$
$$\approx h(H^*, Q^*) + \left.\frac{\partial h}{\partial H}\right|_{\substack{H=H^* \\ Q_1=Q^*}} \Delta H(t) + \left.\frac{\partial h}{\partial Q_1}\right|_{\substack{H=H^* \\ Q_1=Q^*}} \Delta Q_1(t),$$

where $\Delta Q_2(t)$ is a small deviation in the output mass flow rate and

$$\left.\frac{\partial h}{\partial H}\right|_{\substack{H=H^* \\ Q_1=Q^*}} = \frac{g\rho^2 {A_2}^2}{Q^*},$$

and

$$\left.\frac{\partial h}{\partial Q_1}\right|_{\substack{H=H^* \\ Q_1=Q^*}} = 0.$$

Therefore, the linearized equation for the output variable $Q_2(t)$ is

$$\Delta Q_2(t) = \frac{g\rho^2 A_2{}^2}{Q^*}\Delta H(t). \tag{2.113}$$

For control system design and analysis, it is convenient to obtain the input–output relationship in the form of a transfer function. The tool to accomplish this is the Laplace transform. Taking the time-derivative of Equation (2.113) and substituting into Equation (2.111) yields the input–output relationship

$$\Delta\dot{Q}_2(t) + \frac{A_2{}^2}{A_1}\frac{g\rho}{Q^*}\Delta Q_2(t) = \frac{A_2{}^2 g\rho}{A_1 Q^*}\Delta Q_1(t).$$

If we define

$$\Omega := \frac{A_2{}^2}{A_1}\frac{g\rho}{Q^*}, \tag{2.114}$$

then we have

$$\Delta\dot{Q}_2(t) + \Omega\Delta Q_2(t) = \Omega\Delta Q_1(t). \tag{2.115}$$

Taking the Laplace transform (with zero initial conditions) yields the transfer function

$$\Delta Q_2(s)/\Delta Q_1(s) = \frac{\Omega}{s+\Omega}. \tag{2.116}$$

Equation (2.116) describes the relationship between the change in the output mass flow rate $\Delta Q_2(s)$ due to a change in the input mass flow rate $\Delta Q_1(s)$. We can also obtain a transfer function relationship between the change in the input mass flow rate and the change in the water level in the tank, $\Delta H(s)$. Taking the Laplace transform (with zero initial conditions) of Eq. (2.111) yields

$$\Delta H(s)/\Delta Q_1(s) = \frac{k_2}{s+\Omega}. \tag{2.117}$$

Given the linear time-invariant model of the water tank system in Equation (2.115), we can obtain solutions for step and sinusoidal inputs. Remember that our input $\Delta Q_1(s)$ is actually a change in the input mass flow rate from the steady-state value Q^*.

Consider the step input

$$\Delta Q_1(s) = q_o/s,$$

where q_o is the magnitude of the step input, and the initial condition is $\Delta Q_2(0) = 0$. Then we can use the transfer function form given in Eq. (2.116) to obtain

$$\Delta Q_2(s) = \frac{q_o\Omega}{s(s+\Omega)}.$$

The partial fraction expansion yields

$$\Delta Q_2(s) = \frac{-q_o}{s + \Omega} + \frac{q_o}{s}.$$

Taking the inverse Laplace transform yields

$$\Delta Q_2(t) = -q_o e^{-\Omega t} + q_o.$$

Note that $\Omega > 0$ (see Equation (2.114)), so the term $e^{-\Omega t}$ approaches zero as t approaches ∞. Therefore, the steady-state output due to the step input of magnitude q_o is

$$\Delta Q_{2_{ss}} = q_o.$$

We see that in the steady state, the deviation of the output mass flow rate from the equilibrium value is equal to the deviation of the input mass flow rate from the equilibrium value. By examining the variable Ω in Equation (2.114), we find that the larger the output port opening A_2, the faster the system reaches steady state. In other words, as Ω gets larger, the exponential term $e^{-\Omega t}$ vanishes more quickly, and steady state is reached faster.

Similarly for the water level we have

$$\Delta H(s) = \frac{-q_o k_2}{\Omega}\left(\frac{1}{s + \Omega} - \frac{1}{s}\right).$$

Taking the inverse Laplace transform yields

$$\Delta H(t) = \frac{-q_o k_2}{\Omega}(e^{-\Omega t} - 1).$$

The steady-state change in water level due to the step input of magnitude q_o is

$$\Delta H_{ss} = \frac{q_o k_2}{\Omega}.$$

Consider the sinusoidal input

$$\Delta Q_1(t) = q_o \sin \omega t,$$

which has Laplace transform

$$\Delta Q_1(s) = \frac{q_o \omega}{s^2 + \omega^2}.$$

Suppose the system has zero initial conditions, that is, $\Delta Q_2(0) = 0$. Then from Equation (2.116) we have

$$\Delta Q_2(s) = \frac{q_o \omega \Omega}{(s + \Omega)(s^2 + \omega^2)}.$$

Expanding in a partial fraction expansion and taking the inverse Laplace transform yields

$$\Delta Q_2(t) = q_o \Omega \omega\left(\frac{e^{-\Omega t}}{\Omega^2 + \omega^2} + \frac{\sin(\omega t - \phi)}{\omega(\Omega^2 + \omega^2)^{1/2}}\right),$$

where $\phi = \tan^{-1}(\omega/\Omega)$. So, as $t \to \infty$, we have

$$\Delta Q_2(t) \quad \to \quad \frac{q_o \Omega}{\sqrt{\Omega^2 + \omega^2}} \sin(\omega t - \phi).$$

The maximum change in output flow rate is

$$|\Delta Q_2(t)|_{\max} = \frac{q_o \Omega}{\sqrt{\Omega^2 + \omega^2}}. \tag{2.118}$$

The above analytic analysis of the linear system model to step and sinusoidal inputs is a valuable way to gain insight into the system response to test signals. Analytic analysis is limited, however, in the sense that a more complete representation can be obtained with carefully constructed numerical investigations using computer simulations of both the linear and nonlinear mathematical models. A computer simulation uses a model and the actual conditions of the system being modeled, as well as actual input commands to which the system will be subjected.

Various levels of simulation fidelity (that is, accuracy) are available to the control engineer. In the early stages of the design process, highly interactive design software packages are effective. At this stage, computer speed is not as important as the time it takes to obtain an initial valid solution and to iterate and fine tune that solution. Good graphics output capability is crucial. The analysis simulations are generally low fidelity in the sense that many of the simplifications (such as linearization) made in the design process are retained in the simulation.

As the design matures usually it is necessary to conduct numerical experiments in a more realistic simulation environment. At this point in the design process, the computer processing speed becomes more important, since long simulation times necessarily reduce the number of computer experiments that can be obtained and correspondingly raise costs. Usually these high-fidelity simulations are programmed in FORTRAN, C, C++, MATLAB, LabVIEW or similar languages.

Assuming that a model and the simulation are reliably accurate, computer simulation has the following advantages [13]:

1. System performance can be observed under all conceivable conditions.
2. Results of field-system performance can be extrapolated with a simulation model for prediction purposes.
3. Decisions concerning future systems presently in a conceptual stage can be examined.
4. Trials of systems under test can be accomplished in a much-reduced period of time.
5. Simulation results can be obtained at lower cost than real experimentation.
6. Study of hypothetical situations can be achieved even when the hypothetical situation would be unrealizable at present.
7. Computer modeling and simulation is often the only feasible or safe technique to analyze and evaluate a system.

The nonlinear model describing the water level flow rate is as follows (using the constants given in Table 2.6):

$$\begin{aligned} \dot{H}(t) &= -0.0443\sqrt{H(t)} + 1.2732 \times 10^{-3}\, Q_1(t), \\ Q_2(t) &= 34.77\sqrt{H(t)}. \end{aligned} \tag{2.119}$$

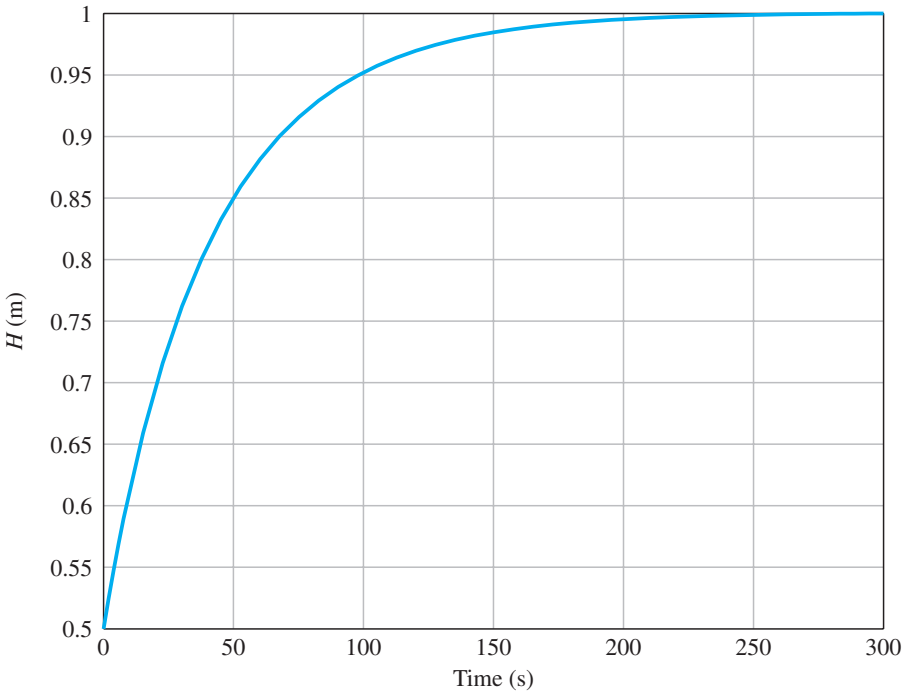

FIGURE 2.39
The tank water level time history obtained by integrating the nonlinear equations of motion in Equation (2.119) with $H(0) = 0.5$ m and $Q_1(t) = Q^* = 34.77$ kg/s.

With $H(0) = 0.5$ m and $Q_1(t) = 34.77$ kg/s, we can numerically integrate the nonlinear model given by Equation (2.119) to obtain the time history of $H(t)$. and $Q_2(t)$. The response of the system is shown in Figure 2.39. As expected from Equation (2.108), the system steady-state water level is $H^* = 1$ m when $Q^* = 34.77$ kg/m^3.

It takes about 250 seconds to reach steady-state. Suppose that the system is at steady state and we want to evaluate the response to a step change in the input mass flow rate. Consider

$$\Delta Q_1(t) = 1 \text{ kg/s}.$$

Then we can use the transfer function model to obtain the unit step response. The step response is shown in Figure 2.40 for both the linear and nonlinear models. Using the linear model, we find that the steady-state change in water level is $\Delta H = 5.75$ cm. Using the nonlinear model, we find that the steady-state change in water level is $\Delta H = 5.84$ cm. So we see a small difference in the results obtained from the linear model and the more accurate nonlinear model.

As the final step, we consider the system response to a sinusoidal change in the input flow rate. Let

$$\Delta Q_1(s) = \frac{q_o \omega}{s^2 + \omega^2},$$

where $\omega = 0.05$ rad/s and $q_o = 1$. The total water input flow rate is

$$Q_1(t) = Q^* + \Delta Q_1(t),$$

where $Q^* = 34.77$ kg/s. The output flow rate is shown in Figure 2.41.

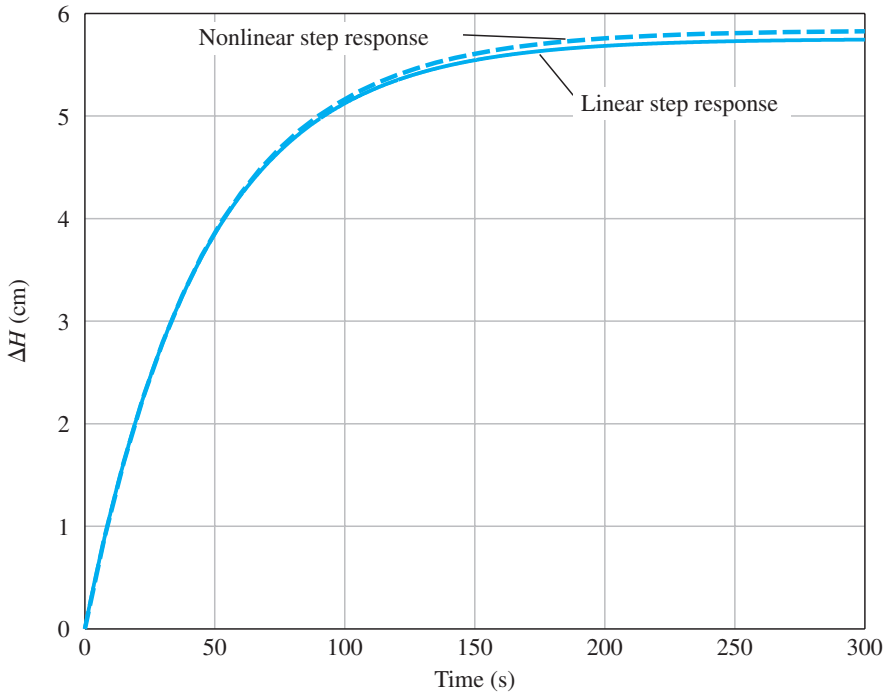

FIGURE 2.40
The response showing the linear versus nonlinear response to a step input.

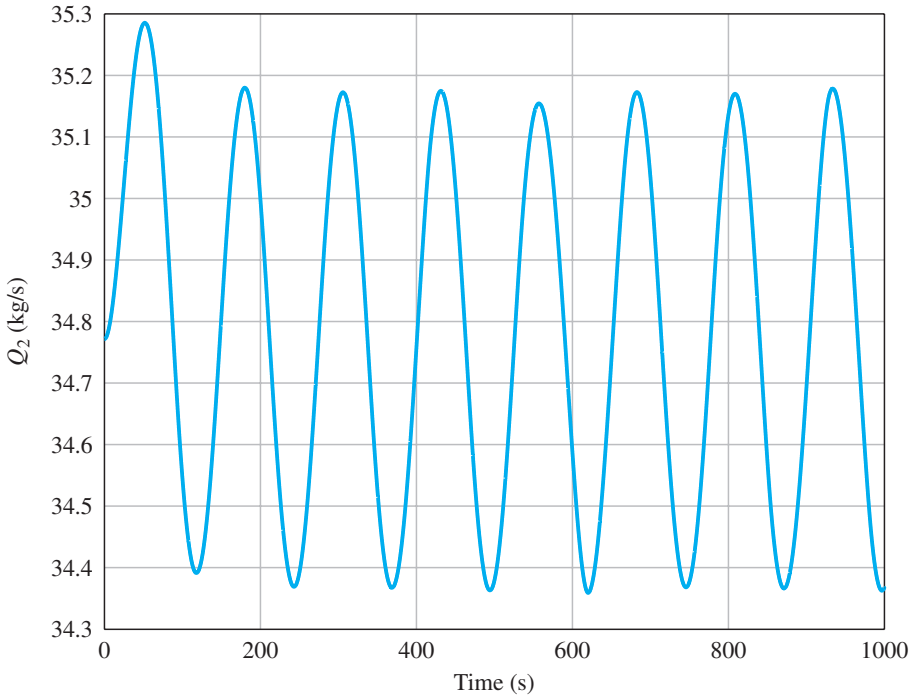

FIGURE 2.41
The output flow rate response to a sinusoidal variation in the input flow.

The response of the water level is shown in Figure 2.42. The water level is sinusoidal, with an average value of $H_{av} = H^* = 1$ m. As shown in Equation (2.118), the output flow rate is sinusoidal in the steady state, with

$$|\Delta Q_2(t)|_{max} = \frac{q_o \Omega}{\sqrt{\Omega^2 + \omega^2}} = 0.4 \text{ kg/s}.$$

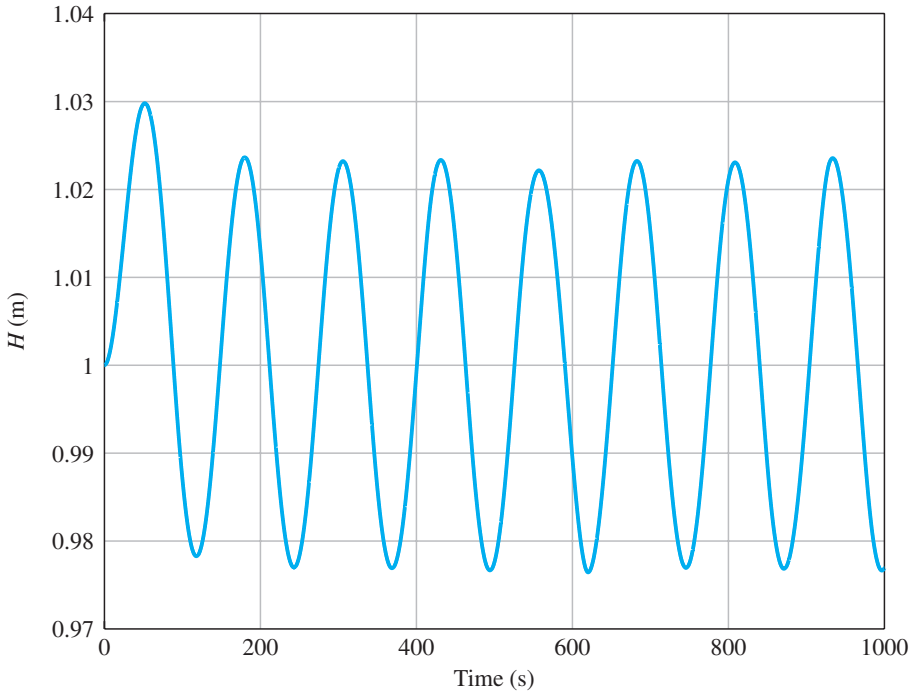

FIGURE 2.42
The water level response to a sinusoidal variation in the input flow.

Thus in the steady state (see Figure 2.41) we expect that the output flow rate will oscillate at a frequency of $\omega = 0.05$ rad/s, with a maximum value of

$$Q_{2_{\max}} = Q^* + |\Delta Q_2(t)|_{\max} = 35.18 \text{ kg/s.} \blacksquare$$

EXAMPLE 2.13 **Electric traction motor control**

The electric motor drive is shown in block diagram form in Figure 2.43(a), incorporating the necessary control. The goal of the design is to obtain a system model and the closed-loop transfer function of the system, $\omega(s)/\omega_d(s)$, select appropriate resistors R_1, R_2, R_3, and R_4, and then predict the system response.

The first step is to describe the transfer function of each block. We propose the use of a tachometer to generate a voltage proportional to velocity and to connect that voltage, v_t, to one input of a difference amplifier, as shown in Figure 2.43(b). The power amplifier is nonlinear and can be approximately represented by $v_2(t) = 2e^3 v_1(t) = g(v_1)$, an exponential function with a normal operating point, $v_{10} = 1.5$ V. We then obtain a linear model

$$\Delta v_2(t) = \left.\frac{dg(v_1)}{dv_1}\right|_{v_{10}} \Delta v_1(t) = 6e^{3v_{10}}\Delta v_1(t) = 540\ \Delta v_1(t). \tag{2.120}$$

Taking the Laplace transform, yields

$$\Delta V_2(s) = 540\Delta V_1(s).$$